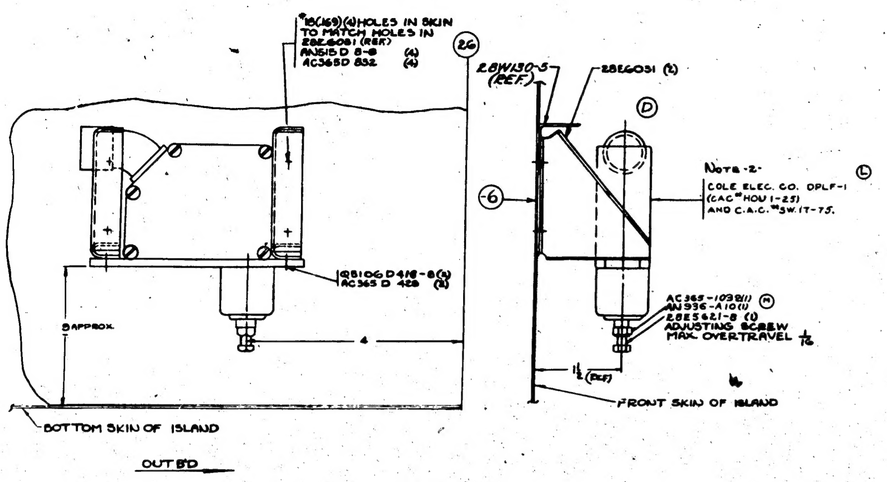

VIEW-B B-

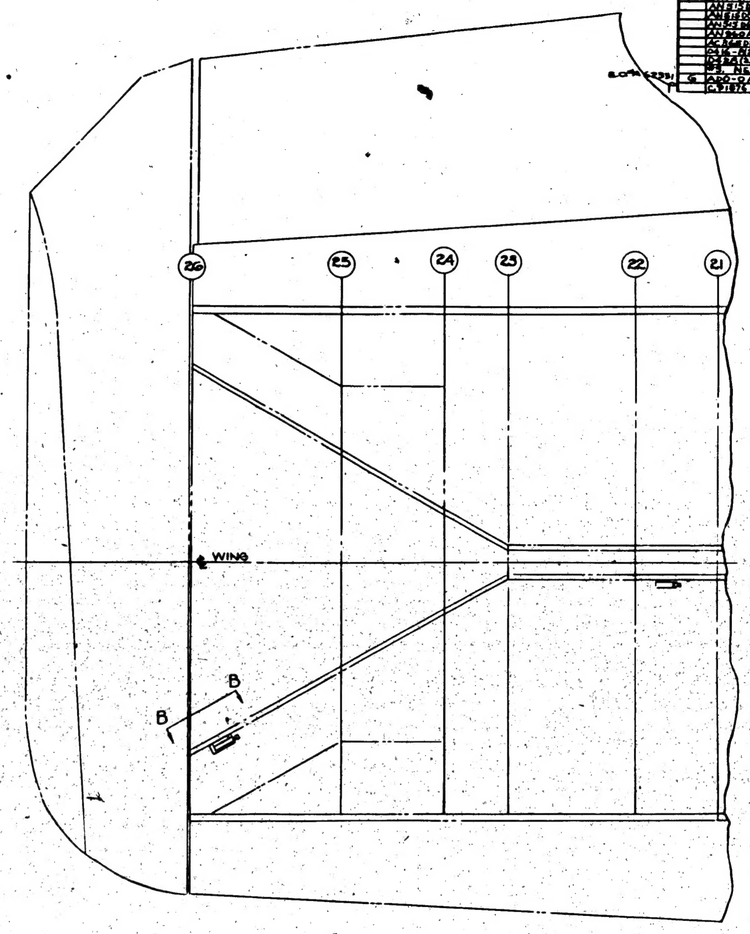

PLAN VIEW-LOOKING UP
SCALE 1 1/2"=1'-0"
OUT'B'D

NOTE:
L 1- C.A.C.# SW.1T-15 MAY BE PURCHASED FROM MU SWITCH CO. OR MICRO SWITCH CO, MICRO SW# BZR-31; MU. SW. AC-101-8
F 3- FOR INSTALLATION OF FLOAT DOWN LIMIT SWITCH SEE DWG. 28E5247.

LTR	ALTERATIONS	DATE	BY	LTR	ALTERATIONS	DATE	BY
A	CHANGED VIEW A TO VIEW [redacted]				NA 2065810 CHG'D FROM		
	COMMON NOMENCLATURE				FROM "S" 1 CU TO CON 2		
	READJUSTED REFERENCE				"R" IN TO SAC CR# 5380 WT CHG		
	5-12-41				CHG'D DIM. ON A FROM		
B	ADDED -3 & -4 WAS				MARK TO STA.		
	ADDED -1 & -2 WT CHG NEG				CHG'D BLOCK ON -3 & -4 FROM		
C	ADDED -5 & -6 WAS				1/2 KIT TO 1 PER 1/2 KIT		
	ADDED -5 & -6 NO WT CHG				ADDED COLL. WT. NOTATION		
D	ADDED 28E6034-5 & -6 NEG.				& SALVAGE EST. VAIR-		
	WT. CHG.				PLANE BLOCK TO ASSY		
E	ADDED 28E5621-8 (1)				WITH RELEASED		
	ADDED AN936-A10 (1)				NOTE #1 WAS "MICRO SW. HOUS-		
	ADDED AC365-1038 (1)				ING MUST BE BONDED TO WING		
	CHANGED -3 & -4 TO REVISED				STRUCTURE IN ACCORDANCE		
	VIEW "A" & STATION - 41.48				WITH SPEC-6471" NOTE #2 WAS		
	ADDED NEG WT. CHG.				"FLOAT UP LIMIT SWITCH ASSY.		
F	REVISED VIEW "A" & 28E6031-6 (1)				R.H. CASE "S" ELBOW MICRO-		
	ADDED 28E5621-8 (1)				AIR SWITCH HOUSING TYPE "H"		
	ADDED 28E6031-7 (1) MICRO SW.				CAT "LNE-11" MICRO SW. TYPE		
	ADDED AC365-1038 (1)				BZR-31 MICRO SWITCH TYPE		
	ADDED AN936-A10 (1)				NOTE #1 WAS MICRO-AIR SW		
	ADDED -1 & -2 WAS -3 & -4				OF TYPE 28E1 ADDED CAC		
	ADDED RS-106D AC365-428 (4)				"BELL CRANK ROTATION		
	ADDED AC365-832 (4)				WT. CHG. NEG.	5-15-41	
	ADDED 28E6034-5 & -6			H	ADDED AC365-1038 (1) AN936-A10		
	CHG. REQUIRED & ASSY.				EL. REQUIRED AN 960 D10 FEL WT CHG. NEG.	12-23-41	
	DESIGN (5) WAS (4) ADDED NOTE						
	#3 NEW WT. - 0.5 LB	4-8-42					
G	ADD -0 & -1 FOR PRV-3						
	CHG'D CAC CR# 5380 ON -						

E.O. A46835A

E.O. A50847 A

E.O. A57289

E.O. A46835

E.O. 819481 7-12-7

E.O. 826777 12

CAC# HOU 1-23 (SEE NOTE 2)				1	
CAC# SW.1T-75 (SEE NOTE 1)				1	
AN936-A10				1	
AC365F-1038				1	
AC365D 832				2	
AC365D428				4	
AN515D8-8				4	
RS106D416-8				2	
28E5621-8				1	
28E6031				2	
28E6034-5 & -6	.040x1/2x1 1/2	AL. ALLOY	6061-T6	2	
PART NO.	STOCK	MATERIAL	SPEC	LH SH REQ.	LH SH REQ.	LH SH REQ.	LH SH REQ.	LH SH REQ.
PARTS LIST PER ASS'Y				-0	-1	-2	-3	-4

NOTE:- THESE PARTS FURNISHED BY BREWSTER

-0	PRV-3	28E5318	1
-0	PRV-3A	28E5338	1

DATE	12/24/41		
DRAWN			
DESIGNED			
CHECKED			
APPROVED			
SCALE	1 1/2"=1'-0"		
NAME	INSTALL'N - ELEC. FLOAT CONTROL SWS		
CONSOLIDATED AIRCRAFT CORP.			
SIZE	J	28E6034	

H 261